Router Table Dovetail Pin Jig

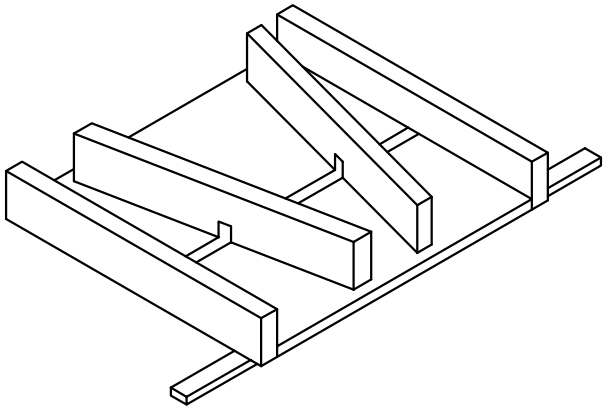

Notes:

1. Adjust Sizes For Your Router Table And Miter Gauge Track.

2. Fasten All Parts Together With Screws And Brads.

3. This Jig Creates The Pins Only. From Here You Will Need To Transfer Your Lines To Cut The Tails.

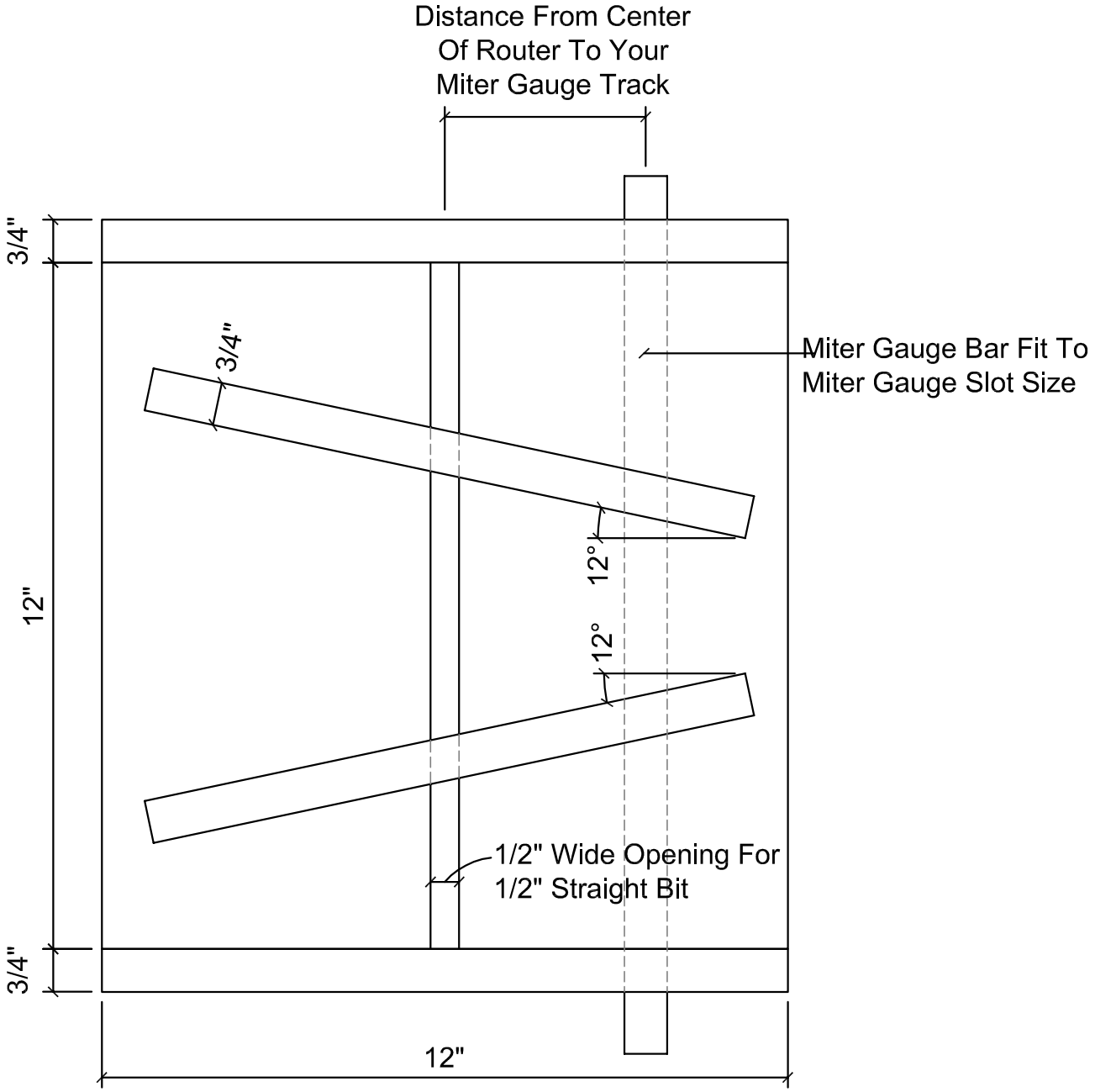

WoodworkersEdge.com © 2007